SELECTED ENGINEERING PROBLEMS
NUMBER 8
DEPARTMENT OF ENGINEERING PROCESSES AUTOMATION AND INTEGRATED MANUFACTURING SYSTEMS

Łukasz KOCHAŃSKI, Rafał RZĄSIŃSKI*

Department of Engineering Processes Automation and Integrated Manufacturing Systems, Faculty of Mechanical Engineering, Silesian University of Technology, Gliwice, Poland
*rafał.rzasiński@polsl.pl

PROJECT OF A FIXTURE FOR JOINING CAR BODY PARTS

Abstract: The key step in designing a new car model to enter the market is choosing the right method to join the elements into a whole body. The known car body production technologies have been developed based on the experience gained in the use of carbon steel. Aluminium sheets stoped to rival with steel ones, when advantages of both were being used. The coexistence of different types of materials used in the same car body structure has been forced changes in the traditional methods of joining them. The random car body consists of 4,000 spot welds, 13 meters of welds, 90 meters of glue [2, 5]. The aim of the study to present various methods of joining car body parts and to compare their strength in an analytical way and using the finite element method. Particular attention has been given to the clinching, which becomes a cheaper and more flexible alternative to resistance spot welding.

1. Introduction

Considering problem concerns the integration of a new model to the produced series of cars. The existing production line is adapted to the production of one of the known models of panel vans in various length and height versions. The manufacturer also plans to introduce this model in the eleven-person minibus version. For reasons such as travel comfort and safety requirements, a few changes related to the construction of the car body should also be set. These include changes in the side walls shape (adding windows), adding next doors and changes in the shape of the roof due to the necessity to implement the emergency exit. The subject concerns the connection of roof cross members to the frame of the hatch located in the roof. It was decided to combine them using special adapters, Fig.1. The production profile should be changed in the least intrusive way to existing devices, control programs and be able to flexibly adapt to current needs [1, 3, 4].

The frame of the hatch will be connected to the intermediate parts by spot welding. The horizontal orientation of the parts and the chamfering of the pipes allow the process to be carried out automatically without major problems. Introducing this process into the existing production plan enables adaptation of the existing empty, two-story cell intended for the introduction of the future model.

The frame is taken directly from the conveyor, while the cross-member must be transported to the other end of the cell on the horizontal conveyor. Then robots equipped with grippers ensuring repeatability of the geometry position, connect elements to the rest of the body. Docked grippers ensures the accuracy of the position of the car parts at least at the level of 0.1 mm. The retooled robots equipped with welding guns perform the resistance welding process. After the process, the bodywork leaves on the skid conveyor.

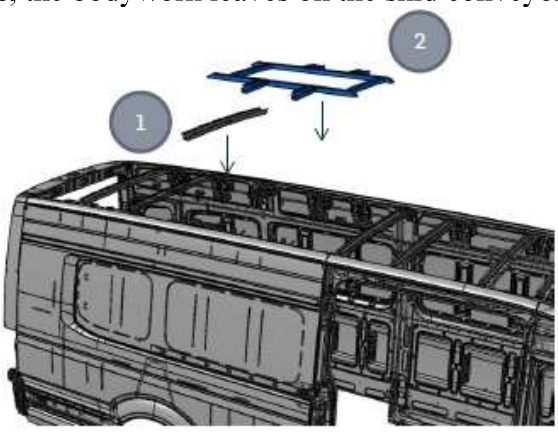

Fig. 1. Marked: 1-Cross member, 2-Frame of the hatch

On the other hand, it is problematic to connect the adapter part with the hatch frame. The Q feeder must already contain roof members assemblied with adapters. The appropriate joining method should be chosen, which will meet the strength requirements and the costs of its introduction will not be high. Strength verification will be carried out using the analytical method as well as the computer finite element method. The methods considered are:

- spot welding,
- clinching,
- electric arc welding,
- riveting,
- adhesive joining.

2. Analysis of selected connection methods

This connection will work under the weight of the emergency frame. The shear force is symmetrically distributed over four elements connecting the frame with the two roof cross members. The weight of the element is 86 N. This gives a static load of 21.5 N per one adapter, Fig. 2.

All strength calculations must be based on the principle that the actual stresses must be less or at most equal to the allowable stresses. The yield strenght of this material is taken as the basis for the selection of acceptable stresses for plasticity materials. In this case, it is steel with the yeld strenght of 275 MPa and tensile strenght of 500 MPa. In order to obtain more certainty, a safety factor is introduced. The joint will work only under the weight of the manhole, so the calculations will apply to static loads. For steel with constant loads its value for shear loads is assumed to be in the range of 2.5-3. Due to the degree of responsibility, it was taken value of 3. So for steel with a yield strenght of 275 MPa, for which the stress value will be calculated will be 92MPa.

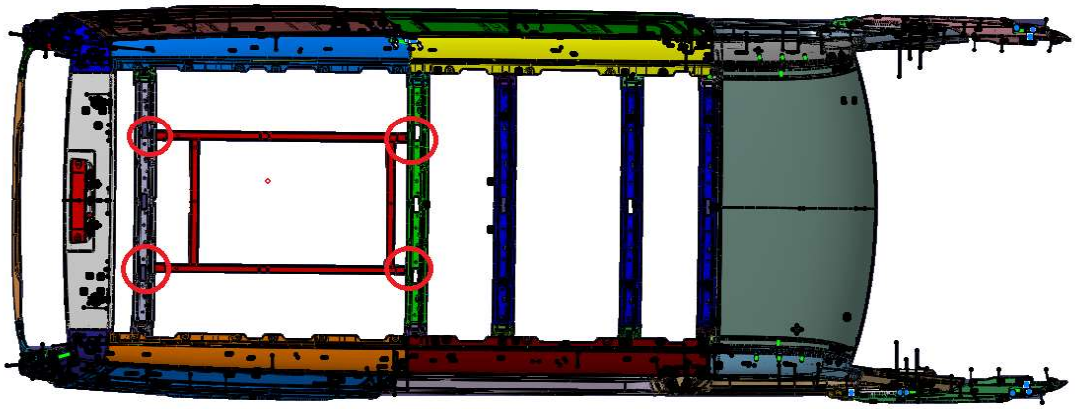

Fig. 2. Marked areas where the gravity of the manhole cuts the adaptation elements

2.1. Arc welded connection

The calculations will be carried out for welds in the areas marked below, Fig. 3. Welding in the direction perpendicular to the modeled welds would be impossible because of the size of the MIG / MAG electrode.
For the designed size of the weld Fig. 4, the size of a one active cross-section area is A = 12.3 mm2. Permissible stress for this connection is 64 MPa.

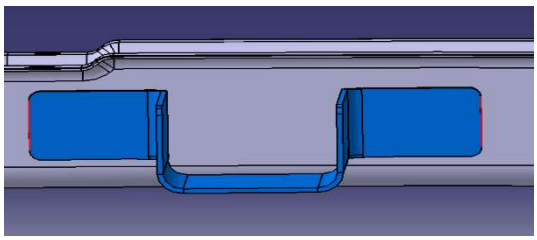

Fig.3. Marked locations of welds

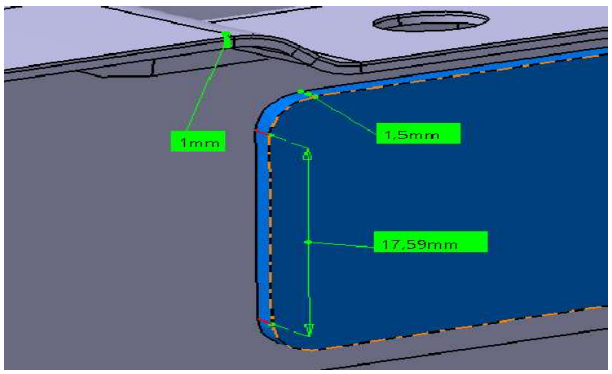

Fig.4. Determining dimensions the size of the weld

2.2. Spot welded connection

The preengineering involved welding in four points on one element, Fig. 5. The PN-EN 74-1: 2006 standard defines the parameters of spot welds in relation to the thickness of the sheets. For class A welds (electronic control welder, adjustable welding conditions, hydraulic or pneumatic clamping of electrodes) for given sheet thicknesses, their diameter is 5 mm.

According to the table contained in the standard, the breaking force of one weld is 2400 N.

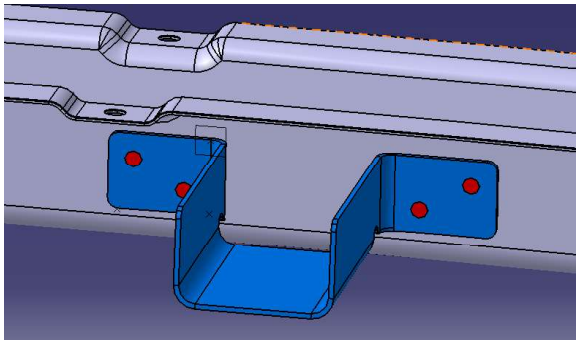

Fig. 5. Adapter welded with roof cross member

2.3. Riveted connection

The riveted connection is also designed as a four-point connection. Precisely at the same points it was planned to use blind rivets (DIN 7337) with a diameter of 5 mm. In strong joints it is use to imply the diameter of rivets as doubled sum of the joint thickness. In addition, according to the design recommendations, the minimum distance of the rivet axis from the edge of the sheet should be e = 1.6d. In connection with this guideline, an 8 mm gap from the edge was kept, Fig. 6. For standardized St2N rivets materials tensile strength is from 340 to 420 MPa. In the case of ordinary joints, the lower value of the allowable shear stress is kt = 80 MPa. The calculation of the riveted connection requires, additionally to taking into account also a check of the strength of the surface pressure of the rivet and joining elements.

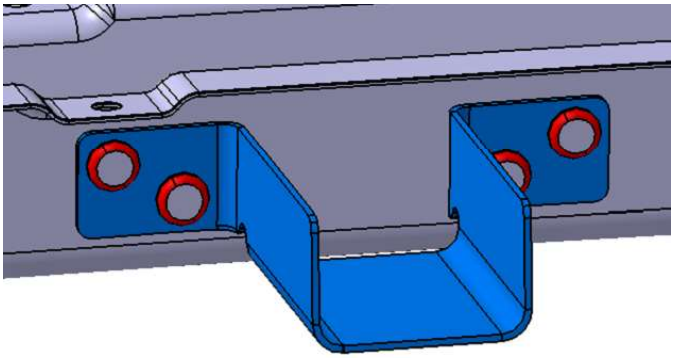

Fig.6. Riveted connection model

2.4. Adhesive connection

Usually, testing adhesive joints, connections are made in the laboratory to simulate structural joints. There are substrates of the same materials, the same adhesive and the same curing cycle are used. Then, strength and other mechanical properties are measured. In the production of presented car's body some elements are combined using a two-component

adhesive based on epoxy resin with an activator. The adhesive has a density of about 0.98 g/cm^3. The manufacturer declares a shearing strength of 22 ± 2 MPa (according to ASTM D 3039). Temperature resistance ranges from -55 ° to + 120 ° C. The optimum thickness of the adhesive is 0.05 - 0.2 mm. The thicker layer reduces the strength of the connection, because its destruction occurs through cohesive damage (shearing of the adhesive itself). Designing adhesive connections it should be remembered that the joint should be subjected to shearing forces only. The presence of a normal stresses causing tearing significantly reduces the properties of the connection.

2.5. Clinching

The calculations for the clinched connection were only analyzed using the finite element method. They were modeled according to the of clinch joints used in the production of another vehicle belonging to the same corporation, Fig. 7. The most important parameters determining the strength of the connection are:

- narrowing p: determines the strength of the shear joint; if the p value is too low, the material from the stamp side breaks in the thinnest place,
- overlap z: determines the strength of the transverse tensile joint called plucking, because in the case of normal force the joint is usually disconnected, without violating the material from the side of the punch and die.

Having the parameters p, z and an information on the geometry of the pneumatic Press, using the Generative Shape Design module, a 3D model of the joint was designed, Fig. 8.

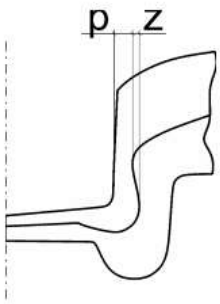

Fig.7. Basic parameters of the clinched joint.

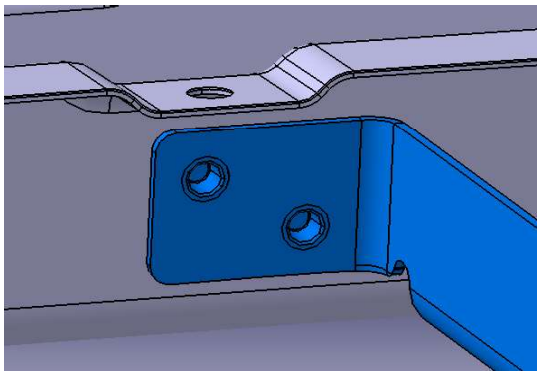

Fig.8. View of the clinched connection model from the punch side

3. Conclusions

The results of analytical calculations clearly indicate that the permanent load applied to the connection is many times lower than the joint strength. However, it can be seen that the rivet connection is several times more resistant to this type of stress. It should also be taken into account that during many years of vehicle using, various situations may arise in which the joint would be loaded with dynamic, impact and thermal loads. The percentage of joint loading for particular connection methods was:

- Arc welding: 1,35%
- Spot welding: 0,9%
- Riveting: 0,22%
- Adhesive joining: 3,95%.

Calculations by the method of finished elements show Tab. 1 and Tab. 2.

Tab. 1. Maximum displacement values under two assumed loads in millimeters

Load	Arc welding	Spot welding	Riveting	Adhesive	Clinching
21,5 N	0,48	0,188	0,223	0,17	0,118
430 N	9,6	3,22	3,39	3,4	1,41

Tab. 2. Maximum stress values under two assumed loads in MPa

Load	Arc welding	Spot welding	Riveting	Adhesive	Clinching
21,5 N	76,1	41,5	109	260	122
430 N	1562	804	166	416	237

Despite the fact that durability tests speak clearly for the use of clinching or gluing, due to the characteristics of the existing production line, it was decided to use traditional joining methods. The analysis shows that joining the considered details by riveting is the most reasonable. The shape of details, strength properties, and a relatively low cost of integration this method are the main arguments for adopting this assumption. The issue under consideration shows that not always modern methods and automation are optimal solutions, even in a modern factory.

References

1. Kochański Ł 2018 *Diploma thesis*, (Gliwice)
2. Lambiase F, Di Ilio A, Paolerri A 2014 *An experimental study on clinched joints realized with different dies* (Thin-Walled Structures) pp71-80
3. Rząsiński R 2015 *Technological similarity theory model for series of types of constructions*, (Special issue: evolution of modern manufacturing processes, technologies and materials, Int. J. Materials and Product Technology, Vol. 50, Nos. ¾), pp 289 – 305
4. Rząsiński R 2018 *Application supporting the process of manufacturing modular construction* (Int. J. Mater. Prod. Technol. 2018 vol. 56 iss. 1/2, pp 95-107
5. Howard D, Scott Helzer C 2005 *Modern Welding Technology* (Pearson Edukation, New Jerse