AGH Journal of Mining and Geoengineering • vol. 36 • No. 3 • 2012

*Ruxiang Qin**, *Liying Teng***, *Shujie Yuan****, *Lei Shi***

NUMERICAL SIMULATION GOB GAS FIELD OF THE ROOF TUNNEL DRAINAGE METHOD

1. Introduction

Roof tunnel drainage is one of the efficiency methane drainage methods [1, 2]. It is an effective method to realize integrated coal exploitation and gas extraction, and common used in longwall coalface in China [1–4]. The methane drainage result of this method is influenced by the distance from coal seam to roof tunnel, kind of the roof rock, height of coal seam, mining height and stability of the coal seam. So some auxiliary methods need to be used to improve methane drainage effect, when the influencing factors change, such as the distance from roof tunnel from coal seam [5, 6]. And the method of downward boreholes from roof tunnel is valid, which is proved in some coalmine. In this paper, methane concentration field in the gob under the methane drainage method of roof tunnel is calculated by computational fluid dynamics.

2. Flow region

The flow region comprise a gob of 150 m long in strike, 238 m width in dip and 30 m height, and coalface of 238 m long, 4 m width and 3 m height, and inlet and outlet of 25.5 m long, 4 m width and 3 m height. Roof tunnel is simplified as a rectangular tube of 4 m width

* Key Laboratory of Integrated Coal Exploitation and Gas Extraction; School of Energy and Safety, Anhui University of Science and Technology, Huainan 232001, China; Key Laboratory of Coal Mine Safety and Efficient Exploitation of Ministry of Education

** School of Energy and Safety, Anhui University of Science and Technology, Huainan 232001, China

*** Key Laboratory of Integrated Coal Exploitation and Gas Extraction; School of Energy and Safety, Anhui University of Science and Technology, Huainan 232001, China

and 2.5 m height on the top of calculated gob. Boreholes are arranged in a plane, at 60°to horizontal plane, fan shaped with the roller of roof tunnel, and the distance is 5 m between the end of boreholes. The depth of the end of boreholes is 10 m on the floor plane of the gob. The sketch of the flow region is shown in Figure 1, and it is meshed with tetrahedron shown in Figure 2.

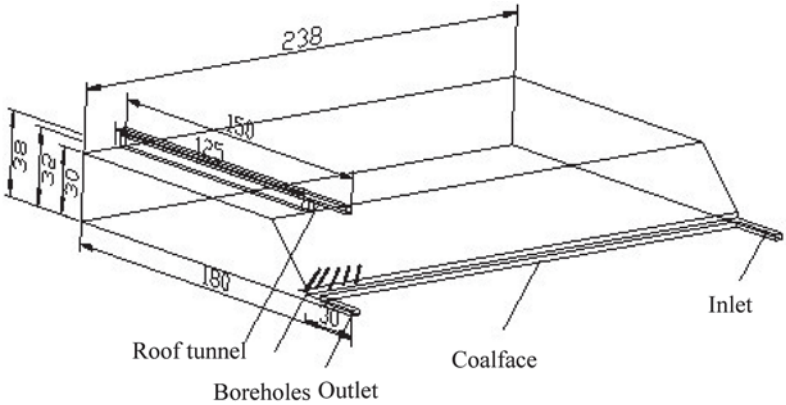

Fig. 1. Geometry model of calculated region

Fig. 2. Meshing of calculated region

3. Boundary parameters of flow region

The inlet of flow region is set velocity boundary and the average airflow rate is 4.17 m/s. At the outlet boundary constant static (gauge) pressure is assumed.

The methane resource which is simulated in the region is consists of three part. The first part is coal wall in the coalface, and the value is 0.159 kg/s as mass inlet. Second part is vertical wall of the gob in the direction of strike, and the value is 0.318 kg/s as mass inlet, too. The third part of methane resource is floor of the gob where methane resource is assumed as come from under adjacent coal seam. Based on the regular of methane emission from the coal grains, the value of this part is changed along the distance from coalface in the gob, and the function is:

$$q(x) = 0.0053\left(1+\frac{x}{10}\right)^{-0.5} \tag{1}$$

Where, x means the distance of the point in the gob from coalface.

Roof tunnel outlet is set wall or velocity outlet, and it is under the particular cases in simulated. When it is velocity outlet, the average velocity is 2 m/s.

The interface of coalface and gob, the gob and roof tunnel, and borehole and gob is set as interior face. Because the interface is between porous area and open fluid flow area, it is porous jump boundary.

On the roof of coalface, inlet tunnel, outlet tunnel, the roof of gob and side wall of gob in the calculated region is assumed as wall boundary, where no methane emission out and air flow.

4. Porous media of the flow region

Break rock is filled in the gob, when the coal seam is mined. And air flow in this area is different from in the tunnel. So porous media is assumed in the gob, that means additional loss of momentum (momentum source term) in the standard momentum equation. The source term is composed of two parts, a viscous loss term, and an inertial loss term. To recover the case of simple homogeneous porous media:

$$S_i = \frac{\mu}{\alpha} v_i + C_2 \frac{1}{2} \rho \left| v_j \right| v_j \tag{2}$$

Where:

α — is the permeability,

C_2 — is the inertial resistance factor.

There are three pattern about air flow in the gob, including turbulent flow, laminar and transition flow. And the relationship o *f* resistance and air flow is described by binomial equation

$$h = R_1 Q + R_2 Q^2 \tag{3}$$

Comparing formula (2) and (3), formula (4) and (5) is drawn.

$$\frac{1}{\alpha} = \frac{R_1 \cdot s}{\mu} \tag{4}$$

$$C_2 = \frac{R_2 \cdot s^2 \cdot 2}{\rho} \tag{5}$$

In order to describe the air flow from coalface to gob or from gob to coalface, the interface of coalface and gob is assumed as porous jump boundary. And the Ergun equation is used, so

$$\frac{1}{\alpha} = \frac{150(1-n)^2}{n^3 d^2} \tag{6}$$

$$C_2 = \frac{3.5(1-n)}{n^3 d} \tag{7}$$

Where, n is porosity, which can be calculated by the width of supporter and the gap between the supporters, d is the width of supporter.

5. The simulation results

Gas concentration field in the gob of coalface using U-shaped ventilation system is simulated. The result of without roof tunnel drainage is shown in Figure 3, and with the roof tunnel drainage is shown in Figure 4, and with the roof tunnel and downward boreholes is shown in Figure 5.

Figure 3 is the gas concentration field of long wall retreat mining with U-shaped ventilation. It shows that along the face tendency direction, gas concentration gradually increased from the side of inlet to outlet. And in the strike direction, the deeper in the gob is, gas concentration is higher. In the coalface, the place of the height gas concentration, over 5%, is on the upper corner. The reason is that the leakage brings the gas flow from the gob to the upper corner. Further more, the upper corner is the turning of the airflow, which generate eddy, and gas is not easy diluted in this area, so gas accumulation is appeared. At the inlet tunnel side of the gob, the gas concentration is low, mainly due to slight compression on the break rock in the area because of the next coal support. So airflow is easily and deeply flow into the gob under the velocity energy, so gas is diluted, and carried away.

Contrast of Figure 3 and Figure 4, the regular of gob gas concentration distribution is not changed whether or not there is roof tunnel drainage. But the roof tunnel drainage make the gas concentration value decrease from 5% to 3.12% at upper corner, and mitigate it in the gob.

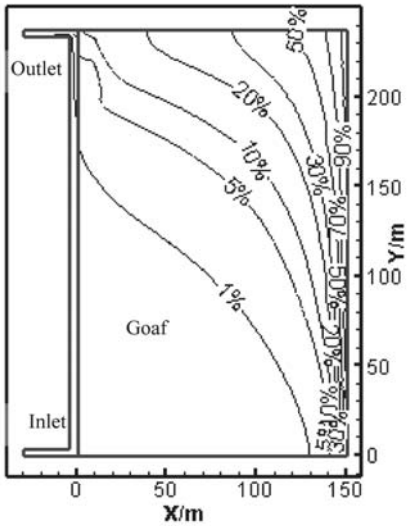

Fig. 3. The simulated gob methane content without roof tunnel drainage

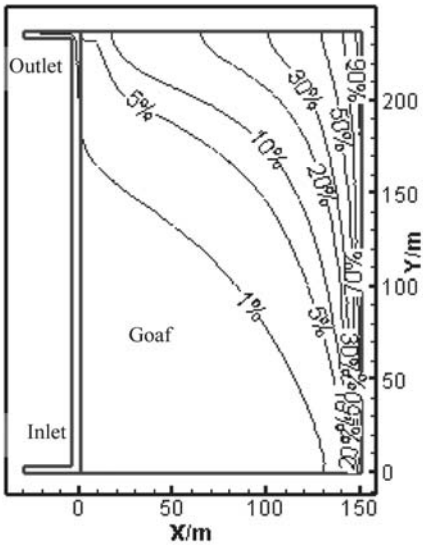

Fig. 4. The simulated gob methane content with roof tunnel drainage

Comparing result of gas concentration field with downward boreholes used or not (Fig. 4 and 5), U-shape ventilation system, shows that, using downward boreholes, gob gas concentration decreases at the same point on the upper side gob, and gas concentration

contour appearing moves to deep gob. But the gas distributes regularly, which gob gas concentration increases from the side of inlet to outlet, from coalface to deep gob, and high concentration gas gathering on the upper corner, is unchanged. Furthermore, gas concentration is decreased from 5% to 0.5% at the upper corner by using downward borehole drainage (Fig. 5). The reason causing this result is that when high concentration gas moves to upper corner powered by gob leakage, it encounters downward boreholes, and flows to roof tunnel through boreholes by extraction pressure. So gas concentration decreases dramatically near the boreholes in gob. The results indicate that boreholes restrain high concentration gas from flowing upper corner.

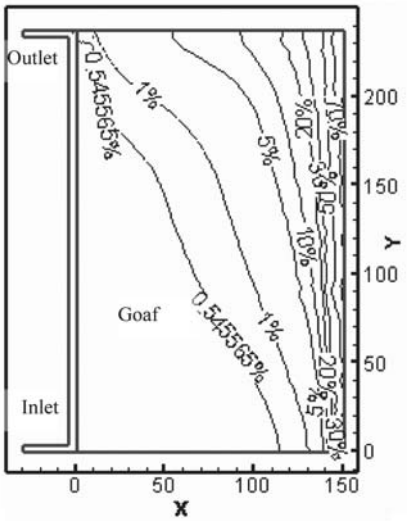

Fig. 5. The simulated gob methane content with roof tunnel and downward boreholes drainage

As a result of mining, great numbers of fractures are produced in the mining-out roof area. From cross-section drawn, this area is under the line, which angle is 42° from the horizontal line anticlockwise, and above the line area, where fracture is less and it is difficult for gas flows in it. Roof tunnel is arranged on the level of 25 m from coal seam, so well region extracting gas is about in the gob 27 m far away from coalface [7]. The gas on the dead triangle area (shown in Fig. 6), where gas moved powers are ventilation pressure, buoyancy and extraction pressure, is not easily extracted to the roof tunnel. So plenty of high concentration gas is produced on the upper corner, when gas moved powers lost balance disturbed by mining factors changing.

The downward boreholes is 60°from roof tunnel clockwise, and it enlarges vertical fracture and realizes gas moved to roof tunnel facility, especially in the triangle area. So gas

concentration in the triangle area is reduced, and then gas concentration over limitation at the upper corner is seldom. But in the deep gob, fracture is excessive no matter in horizontal or vertical. Far away 140 m from coalface, gas concentration changes lightly. This is shown in Figure 7.

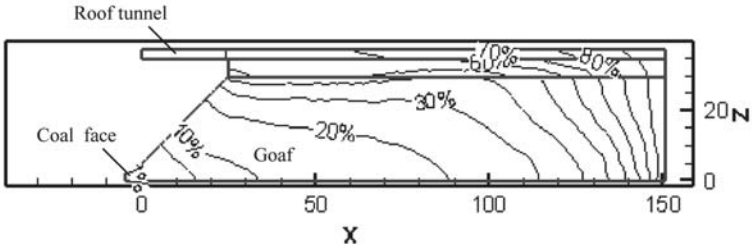

Fig. 6. The simulated gob methane content with roof tunnel drainage

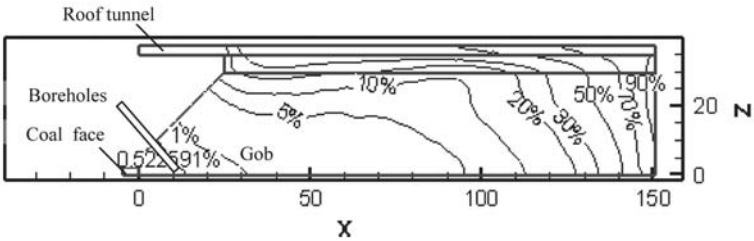

Fig. 7. The simulated gob methane content with roof tunnel and downward boreholes drainage

6. Conclusions

1) Gas drainage by roof tunnel with downward boreholes, shows that gob gas content decreases on the upper side at the same point contrast with only roof tunnel, and gas content contour appearing moves to deep gob. So gas content at upper corner is decreased too.
2) With the gas drainage method of roof tunnel, there is a dead triangle area in the gob, where gas is not easy been extracted. In the case, the range is in 27 m far away from coal face.
3) Downward borehole enlarges vertical fracture and realizes gas moved to roof tunnel facility, especially in the dead triangle area, so gas content in it is reduced. Then gas content over limitation at the upper corner is seldom. Gas content is decreased on the range from coalface to 140 m deep gob.

REFERENCES

[1] Information on http://www.mkaq.org/Article/ShowArticle.asp?ArticleID=5776.

[2] *Jiao Chan-jun*: Coal Technology, Vol. 27 (2008), p. 93 (In Chinese).

[3] *Wang Kang-jian, Liu Jie-gao, Song Cheng-zhang*: Coal Engineering, Vol. 27 (2008), p. 93 (In Chinese).

[4] *Xuquan, Yang Sheng-qiang, Wang Cheng*: Journal of Mining & Safety Engineering, Vol. 27 (2010), p. 62 (In Chinese).

[5] *Liang Jia-hong, Wang Kang-jian*: Coal Technology, 27 (2008), p. 93 (In Chinese).

[6] *Fang You-xiang, Zhu Ling*: Coal Mine Safety, Vol. 3 (2001), p. 12 (In Chinese).

[7] *Tu Min, Liu Ze-gong*: Coal Science and Technol, Vol.7 (2002), p.54 (In Chinese).