Zeszyty Naukowe Wydziału Elektrotechniki i Automatyki Politechniki Gdańskiej Nr 40

XXIV Seminarium

ZASTOSOWANIE KOMPUTERÓW W NAUCE I TECHNICE 2014

Oddział Gdański PTETiS

INFLUENCE OF VARIOUS TRANSMISSION LINE MODELS ON LIGHTNING OVERVOLTAGES IN INSULATION COORDINATION STUDIES

Piotr ORAMUS, Marek FLORKOWSKI

Korporacyjne Centrum Badawcze ABB, ul. Starowiślna 13A, 31-038 Kraków
e-mail: piotr.oramus@pl.abb.com tel: +48 12 4244 186
e-mail: marek.florkowski@pl.abb.com tel: +48 12 4244 104

Abstract: Lightning overvoltages occurring in electrical power systems are especially dangerous for devices installed in network. Lightning transients may cause damages of devices installed in power system. Therefore, analysis of lightning overvoltages in electrical power systems is important to ensure reliability of power supply. For this purpose, development of mathematical models is necessary, however mathematical complexity can lead to slightly different results. In this paper, both various overhead transmission lines models as well as exemplary insulation coordination analysis performed in HV power system have been presented. Simulation results performed for various models of overhead lines implemented in EMTP/ATP software have been presented and compared in this paper.

Keywords: GIS substations, lightning overvoltages, tower footing resistance, transmission line models.

1. INTRODUCTION

Lightning strokes occurring in overhead lines may cause increase of voltage over the nominal value, what can be dangerous for insulating systems of electrical devices installed in electrical power network, due to possibility of devices damage installed in power systems. Lightning overvoltages are even able to cause power outage in power systems. Therefore, from viewpoint of insulation coordination studies, it is very important to estimate values of overvoltages during lightning strokes. Estimation of lightning overvoltages values can be performed in specialized software. However, for this purpose, equivalent mathematical models of electrical devices installed in power system are indispensable. This article presents comparison of transmission line models useful to perform simulations in EMTP/ATP software.

Three methods of modeling transmission lines have been presented in this paper: PI model, JMarti frequency-dependent model, and JMarti model including nonlinear tower footing resistance. PI model of overhead line based on linear components was presented as the simplest simulation approach. In order to perform more accurate analysis, JMarti frequency-dependent model can be used. JMarti model provides more accurate representation of transmission line for transient states analyses in wide range of analyzed frequency. Whereas, the most complexity model presented in this paper is frequency-dependent JMarti model coupled with nonlinear tower footing resistance.

Each of above mentioned models has been used to perform lightning overvoltages simulations in electrical power network (backflash situation). Calculation results presented in this paper have been performed in HV power system containing SF_6 Gas Insulation Substation (GIS), power transformer, two sections of HV cables, air and GIS surge arresters. Thus, simulation results show practical comparison of various transmission line models used to perform insulation coordination analysis in electrical power systems. Lightning overvoltages calculations for analyzed surge arresters model presented in this paper have been simulated in EMTP/ATP software.

2. MODELING TRANSMISSION LINE

2.1. Linear PI model

The PI model is simple approach for modeling transmission line. Typical scheme of multi-conductor PI model circuit has been presented in Figure 1.

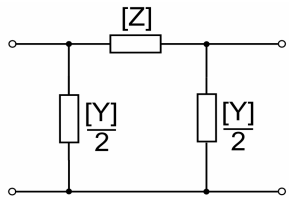

Fig. 1. Typical scheme of multi-conductor nominal PI line model

PI model presented in Figure 1 is represented by matrixes with parameters of multi-conductor overhead line. For partially symmetrical 3-phases single circuit line, matrixes are size of 3x3. Parameters of matrix [Z] (resistance and inductance) are related to geometry layout, while parameters of matrix [Y] (susceptance and conductance) represent losses of overhead line. PI model scheme illustrated in Figure 1 represents one incremental section of a line with multi-conductor layout. Detailed description of matrixes used to modeling line is presented in [1].

The calculations with PI model are faster in comparison to most complexity models, however frequency-dependent

behavior of overhead lines cannot be represented by simple PI model. Furthermore, spurious oscillations caused by lumped parameter elements should be expected, what also influences on computations accuracy. The number of PI circuits used to simulation depends on particular simulated system. The main advantage of PI model is no dependences of calculation time step on simulation results. PI model is mainly recommended to modeling short distance of overhead lines [2].

Linear parameters of overhead line PI model can be obtained for positive as well as for zero sequence from a supporting program (*LINE CONSTANS*) implemented into EMTP/ATP software. Calculations are based on geometry data of overhead line. Detailed description of calculation method is presented in [3].

2.2. José Marti frequency-dependent model

José Marti (JMarti) model of transmission line is most accurate approach to modeling in comparison to linear PI model. Model behavior is variable in frequency domain, what improves computation accuracy for defined frequency range. In JMarti model, both the characteristic impedance as well as the propagation function are calculated using modal characteristics (calculated in defined frequency range for a constant transformation matrix). Thus, JMarti model computes the characteristic admittance and propagation constant by rational functions. JMarti model uses a constant transformation matrix in order to convert from mode domain to phase domain (although in case of modeling transmission line it does not matter, still it can have influence for cable line case). In practice, JMarti model behavior can be unstable for low frequencies analyses [2].

The JMarti model is fitted in a frequency range specified with the number of decades (*Decades*) from defined initial frequency (*Freq. init*) and the number of sample points per decade (*Points/Dec*). Model requires defined frequency where the transformation matrix is calculated (this frequency should be dominant is the later transient study), and a steady state frequency for calculation of the steady state condition. The JMarti model needs in some cases modification of the default fitting data. Detailed description of JMarti model parameters is presented in [3].

2.3. Nonlinear tower footing resistance

Values of lightning overvoltages in power system for backflash situation strongly depend on tower footing resistance. Because of high frequency and magnitude of lightning current the ground in the immediate vicinity of the earthing loop can be led to ionization. Therefore, value of tower footing resistance decreases during lightning transient. For this reason, to improve calculations accuracy, dynamic tower footing resistance, R_T has been implemented into overhead line model, according to formula [4]:

$$R_T = \frac{R_0}{\sqrt{1+\frac{I}{I_g}}} \tag{1}$$

where: R_0 – tower footing resistance at low current and low frequency [Ω], I – the lightning current through the footing impedance [A], I_g – the limiting current to initiate sufficient soil ionization [A].

The limiting current to initiate sufficient soil ionization from dependence (1) is determined by dependence [4]:

$$I_g = \frac{1}{2\Pi} \cdot \frac{E_0 \cdot \rho}{R_0^2} \tag{2}$$

where: R_0 – tower footing resistance at low current and low frequency [Ω], E_0 – soil ionization gradient [kV/m], ρ – soil resistivity [Ω·m].

Nonlinear tower footing resistance model has been also taken into account coupled with JMarti model to improve simulation results accuracy.

3. TRANSMISSION LINE MODELS IN EMTP/ATP PROGRAM

Two parallel lines with conductors per bundle have been introduced to simulations. Layout of 400 kV used to analyses has been presented in Figure 2.

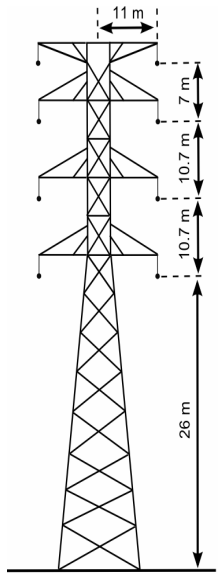

Fig. 2. Tower layouts for 400 kV system used to analysis

Geometry data of overhead line shown in Figure 2 have been implemented into EMTP/ATP software to calculate overhead line model parameters. In order to determine JMarti and PI models parameters, data have been introduced to subroutine *LINE CONSTANTS* implemented into EMTP/ATP software. Part of input line model file (*LINE.PCH*) with overhead line geometry has been presented in Figure 3.

```
C  <++++++>  Cards punched by support routine on  11-Nov-18  11.00.00  <++++++>
C LINE CONSTANTS
C $ERASE
$UNITS,    50.,    50.
C BRANCH  IN___AOUT__AIN___BOUT__BIN___COUT__CIN___DOUT__DIN___EOUT__EIN___FOUT_
C BRANCH  IN___GOUT__GIN___HOUT__H
C METRIC
C   1  0.5   0.067 4            2.91    -11.    47.4    34.7
C   2  0.5   0.067 4            2.91    -11.    36.7    22.5
C   3  0.5   0.067 4            2.91    -11.     26.     10.
C   4  0.5   0.067 4            2.91     11.    47.4    34.7
C   5  0.5   0.067 4            2.91     11.    36.7    22.5
C   6  0.5   0.067 4            2.91     11.     26.     10.
C   7 0.15    1.46 4            1.62    -11.    54.4    52.3
C   8 0.15    1.46 4            1.62     11.    54.4    52.3
C BLANK CARD ENDING CONDUCTOR CARDS
C     200.       50.           000001 000000 0     0.4              44
$VINTAGE, 1
$UNITS,  50.,  50.
```

Fig. 3. Part of input line model file (*LINE.PCH*)

Exemplary output file (*LINE.LIS*) with susceptance matrix and line parameters calculated for PI model has been presented in Figure 4.

```
Susceptance matrix,  in units of  [mhos/kmeter ]  for symmetrical components of the equivalent phase conductor
Rows proceed in the sequence  (0, 1, 2),  (0, 1, 2),  etc.;  columns proceed in the sequence  (0, 2, 1),  (0, 2, 1)

   0  1.798746E-06
      0.000000E+00

   1 -5.961646E-09 -7.101442E-08
     -8.394326E-08 -1.149516E-07

   2 -5.961646E-09  2.575371E-06 -7.101442E-08
      8.394326E-08  1.076159E-23  1.149516E-07

   0 -3.295945E-07 -1.829762E-08 -1.829762E-08  1.798746E-06
      0.000000E+00 -2.890712E-08  2.890712E-08  0.000000E+00

   1 -1.829762E-08 -1.859489E-08 -4.485868E-08 -5.961646E-09 -7.101442E-08
     -2.890712E-08 -2.532816E-08  2.917139E-23 -8.394326E-08 -1.149516E-07

   2 -1.829762E-08 -4.485868E-08 -1.859489E-08 -5.961646E-09  2.575371E-06 -7.101442E-08
      2.890712E-08 -2.917139E-23  2.532816E-08  8.394326E-08 -2.485873E-23  1.149516E-07
        Both  "R"  and  "X"  are in  [ohms];    "C"  are in  [microMhos].

Sequence        Surge impedance        Attenuation    velocity     Wavelength    Resistance     Reactance    Susceptance
          magnitude(ohm) angle(degr.)     db/km        km/sec          km          ohm/km         ohm/km       mho/km
    Zero :  8.56569E+02 -4.57870E+00  1.06833E-03  2.04553E+05  4.09106E+03  2.10036E-01  1.30294E+00  1.79875E-06
Positive:  4.20822E+02 -4.30136E+00  7.06037E-04  2.90694E+05  5.81389E+03  6.82207E-02  4.50944E-01  2.57537E-06
Request for flushing of punch buffer.                          |$PUNCH
```

Fig. 4. Part of output line model file (*LINE.PCH*)

As shown in Figure 4, equivalent parameters of overhead line (surge impedance, attenuation, wave velocity, wavelength, resistance, reactance, and susceptance) have been calculated for zero and positive sequence. Similar computations have been performed for JMarti model with following parameters: *Freq. init* = 0.01 Hz, *Decades* = 8, *Freq. matrix* = 10 kHz, *Points/Dec* = 10.

According to description presented in section 2.3, tower footing resistance has been implemented into EMTP/ATP model as nonlinear resistance, utilizing formulas (1) and (2) in MODELS block and variable resistance *R(TACS) type 91*. Method implementation has been illustrated in Figure 5.

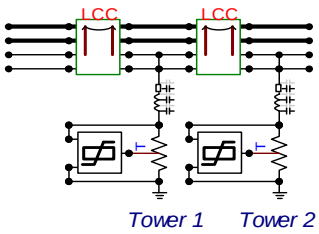

Fig. 5. Nonlinear tower footing resistance implemented into EMTP/ATP program

In this approach, tower has been modeled as surge impedance (Z = 172 Ω) connected to ground through nonlinear resistance. MODELS block calculates resistance value basing on surge current flowing through the surge impedance. Simulations have been performed for following parameters: ρ = 3000 Ω·m, E_0 = 300 kV, R_0 = 20 Ω.

4. STUDIED SYSTEM MODELS

Simulations have been calculated in 400 kV power system for backflash situation (direct lightning stroke at tower localized 400 m from substation). Incoming 20 km overhead transmission line has been modeled by PI model (static tower footing resistance R = 20 Ω), JMarti model (static tower footing resistance R = 20 Ω), and JMarti model coupled with nonlinear tower footing resistance according to description (section 2 and 3).

Analyzed power system contains two cable sections (2 km and 300 m). 2 km cable connects portal tower (gantry) with GIS substation, while 300 m cable provides connection between GIS substation and HV power transformer. GIS substation has been modeled as surge impedance (Z = 60 Ω).

In considering power system, surge arresters have been installed in three different places: between tower portal and 2 km cable, between 2 km cable and GIS entry, and between GIS substation and 300 m cable. Surge arresters have been modeled according to IEEE description presented in [5].

In analyzed situation, backflash occurs across insulator installed in tower localized 400 m from tower portal. The insulators are modeled as the Leader Progression Model. This model provides an equivalent leader propagating along the insulator. Thus, backflash occurs while the leader length reaches length of the insulator gap in defined time equal to that of real leaders. The leader velocity and its propagation are represented by a formula [6]:

$$\frac{dL}{dt} = K \cdot u(t) \cdot \left(\frac{u(t)}{(g-L)} - E_0 \right) \tag{3}$$

where: K – constant [m^2/([kV]^2·s)], E_0 – average gradient voltage [kV/m], $u(t)$ – voltage across the gap [kV], g – gap length [m], L – leader length [m].

Dependence (3) has been implemented into EMTP/ATP program by MODELS block.

Simulations have been performed for the exemplary shape of surge current. The current lightning source has been modeled as 10/350 µs source current according to data taken from [7]. For this purpose, Heidler current source implemented in EMTP/ATP software has been used. For analysis, peak value of lightning current is 200 kA.

Circuit diagram of analyzed power system into EMTP/ATP program has been presented in Figure 6.

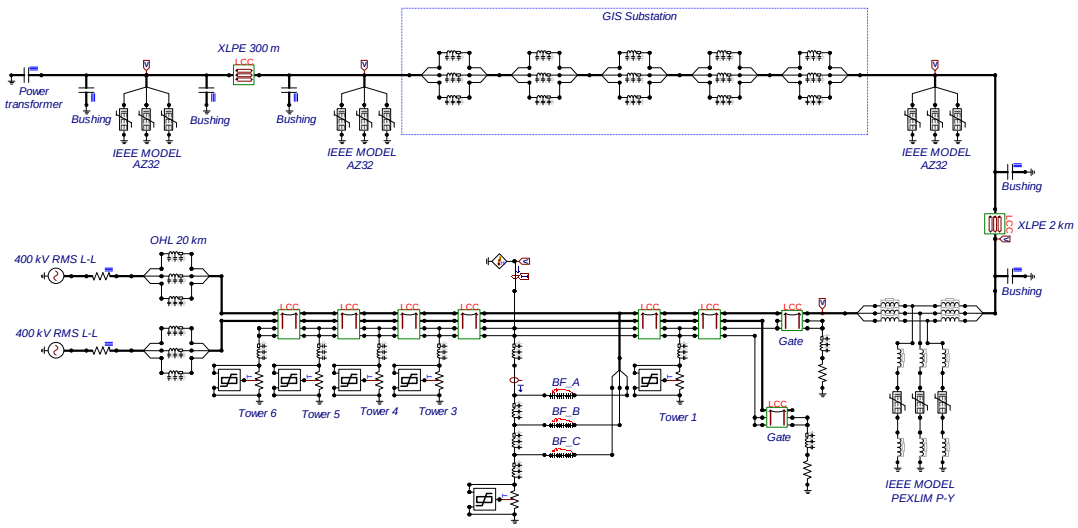

Fig. 6. Circuit diagram of analyzed power system implemented into EMTP/ATP program

5. SIMULATION RESULTS

In order to compare influence of various overhead line models on simulation results, simulations for backflash have been performed for power system presented in Figure 6. Calculations of waveforms have been performed for three various overhead line models (according to section 2 and 3). Calculated voltage at power transformer terminal has been presented in Figure 7.

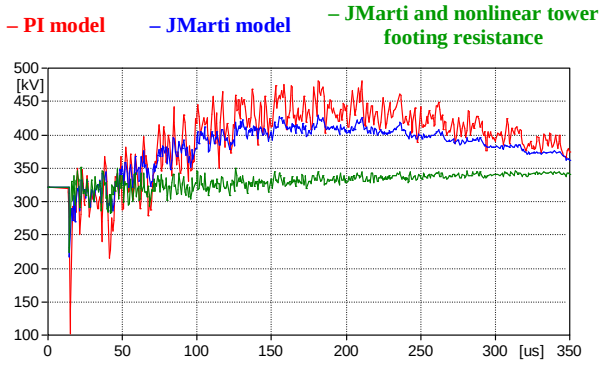

Fig. 7. Calculated voltage at power transformer terminal

Calculated voltage at air surge arrester terminal has been presented in Figure 8.

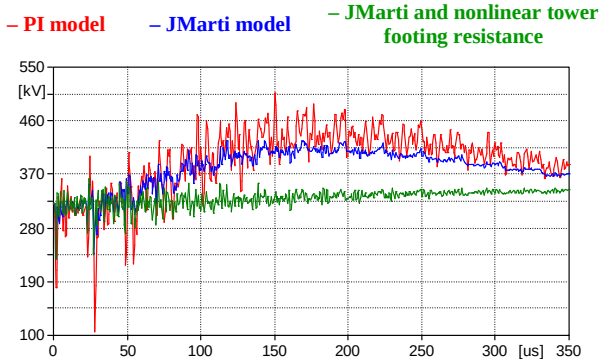

Fig. 8. Calculated voltage at air surge arrester terminal

As shown in Figure 7 and in Figure 8, waveforms shapes calculated for PI model and JMarti are very similar in shape. Waveform simulated for JMarti model coupled with nonlinear tower footing resistance reaches the smallest peak values. Peak values of simulated voltages at air surge arresters, and GIS entrance and power transformer have been listed in Table 1.

Table 1. Simulation results of peak voltages for various overhead line models

	Air surge arrester	GIS entrance	Power transformer
	[kV]		
PI model	470	465	460
JMarti model	427	428	429
JMarti with nonlinear tower footing resistance	363	361	352

As shown in Table 1, simulation results obtained for the PI model have the largest values, while voltages values are the smallest for JMarti model coupled with nonlinear tower footing resistance in each analyzed place of analyzed power system.

6. CONCLUSIONS

Simulation results show differences between analyzed overhead line models. In insulation coordination analysis, differences in simulation results for analyzed power system configurations are significant – voltage at power transformer terminal is greater about 108 kV for PI model in comparison to JMarti model with nonlinear tower footing resistance. According to simulation results, increase on model complexity has impact on peak voltages. All calculated voltage waveforms are similar, however oscillations for PI model are dominating.

7. LITERATURE

[1] Wedepohl, L. M., Application of matrix methods to the solution of travelling-wave phenomena in polyphase systems, Proceedings of the IEE, Vol. 110(12), 1963

[2] Orlando P. Hevia, Alternative transients program: comparison of transmission line models. Revista Latinoamericana del ATP, [S.l.], v.1, p. 1–5, Mar. 1999

[3] Dommel, H., et al., Electromagnetic Transient Program Reference Manual (EMTP Theory Book), 1986

[4] IEEE Fast Front Transients Task Force, Modeling Guidelines for Fast Front Transients, IEEE Transactions on Power Delivery, Vol. 11, No. 1, January 1996

[5] IEEE Working Group 3.4.11 of Surge Protective Devices Committee – Modeling of metal oxide surge arresters – IEEE Transactions On Power Delivery, Vol. 7, No. 1, pp. 301-309, January 1992

[6] A. R. Hileman, Insulation Coordination for Power Systems, CRC Press Taylor and Francis Group, New York, 1999

[7] International standard IEC 62305-1. Protection against lightning – Part 1: General principles

PORÓWNANIE MODELI LINII PRZESYŁOWYCH STOSOWANYCH DO WYKONYWANIA ANALIZ PRZEPIĘCIOWYCH W SYSTEMACH ELEKTROENERGETYCZNYCH

Słowa kluczowe: modele linii przesyłowych, przepięcia atmosferyczne, rezystancja uziemienia słupów, rozdzielnice GIS

Przepięcia atmosferyczne są szczególnie niebezpiecznie dla urządzeń zainstalowanych w sieciach elektroenergetycznych. Z tego powodu, zdeterminowanie poziomu przewidywanych przepięć atmosferycznych jest istotne z punktu widzenia koordynacji izolacji. Do tego celu, konieczne jest opracowanie modeli matematycznych poszczególnych elementów sieci elektroenergetycznej. Jednakże, w zależności od sposobu modelowania, wyniki symulacji mogą się różnić pomiędzy sobą. Artykuł zawiera zestawienie trzech modeli matematycznych linii przesyłowych, mogących posłużyć do przeprowadzania symulacji przepięć atmosferycznych. W artykule przedstawiono wyniki symulacji przepięć atmosferycznych przeprowadzonych dla przykładowego systemu z wykorzystaniem różnych modeli linii przesyłowych.