THE INFLUENCE OF MASS PARAMETERS OF THE BODY ON ACTIVE SAFETY OF A FIRE ENGINE IN TERMS OF THE SELECTION OF CHASSIS

PAULINA NOGOWCZYK[1], ADAM PAŁKA[2], GRZEGORZ SZCZĘŚNIAK[3]
SZCZĘŚNIAK Special Vehicles Ltd.

Summary

The position of the centre of masses affects the distribution of wheel loads and, at the same time, the stability of the vehicle in drive on bends as well as the course (intensity and efficiency) of braking. For fire engines heading for the site of emergency, these are important properties regarding performance. The paper presents a simplified factor analysis of the influence of the centre of masses position in special vehicles with fire fighting bodywork on the characteristics of steering, lateral stability and braking forces. A relation between the transfer function and the driving speed has been presented and the influence of the distance between the centre of masses from the rear axle of the vehicle on its steerability has been analysed.
With the examples of given vehicles, it has been shown to what extent the mentioned indices and parameters can be changed after equipping a standard truck chassis with our bodywork system. The information contained herein may be useful for the construction departments of specialized vehicle bodywork manufacturers.

Keywords: special vehicles, centre of masses parameters, steering characteristics, dynamic lateral stability, braking forces

1. Introduction

As we know, most of special cars, including fire engines (fire trucks), are built on standard truck chassis. Chassis manufacturers provide a number of construction and operating parameters that should not change or should fall within acceptable ranges after fitting a specialized body. Changes of such parameters could have an adverse impact on safety. Assessment of the degree of influence of individual parameters requires a factor analysis that should be carried out at the design stage.

[1] SZCZĘŚNIAK Special Vehicles Ltd., ul. Bestwińska 105A, 43-346 Bielsko-Biała, pnogowczyk@psszczesniak.pl
[2] SZCZĘŚNIAK Special Vehicles Ltd., ul. Bestwińska 105A, 43-346 Bielsko-Biała, apalka@psszczesniak.pl
[3] SZCZĘŚNIAK Special Vehicles Ltd., ul. Bestwińska 105A, 43-346 Bielsko-Biała, gszczesniak@psszczesniak.pl

While passive safety of special vehicles is shaped mainly by the constructors of special bodywork, active safety, that is stability and drivability, as well as the maneuverability of vehicles are shaped by the constructors of chassis. Manufacturers allow certain changes in chassis, that result from the size of the designed body, especially when, for example, there is a need to change the length of the frame (requiring, among others, changes in the length of the drive shaft and changing the characteristics of rear suspension). Such changes are often introduced e.g. to bodywork constructed by bus manufacturers.

When changing the length of the frame, the kinematic properties of the steering system change (e.g. Ackermann steering geometry) and so does the vehicle's responsiveness. After such changes, vehicles must undergo homologation tests.

Stability and drivability characteristics provide for certain tolerances that guarantee active safety proper allowance in shaping the body (bodywork) according to specialist standards.

The most important requirements of chassis manufacturer concern the permissible total weight and the position of centre of the masses. The permissible total weight of produced vehicles cannot be exceeded.

The position of the centre of masses affects the distribution of wheel loads and, at the same time, the stability of the vehicle in drive on bends as well as the course (intensity and efficiency) of braking. The position of the centre of masses influences also the value of the moment of inertia in relation to the axes of the coordinate system associated with the vehicle (this point is the beginning of the system). The moment of inertia in relation to the x-axis (J_x) affects the transverse tilt (fast drive on bends, passing by and overtaking), the moment in relation to the y axis (J_y), the longitudinal tilt (rapid braking or acceleration) and the moment in relation to the z axis (J_z) - for safe drive on bends and maneuvering without slipping. For fire engines heading for the site of emergency, these are important properties regarding performance.

The issues related to Safety are comprehensively covered in the PN-EN 1846 standard drawn up for such vehicles, Chapter 4 of the document includes table 1, containing the list of situations hazardous for the safety of vehicles. However, passive safety was taken into account in most cases, while the active safety of the vehicle - only to a certain extent.

The cited standard also contains a number of recommendations and procedures enabling experimental verification of the safety of constructed vehicles.

Among the standards of other countries, NFPA 414 [4], concerning a certain variety of fire engines constructed for airports ought to be mentioned. The standard covers active safety issues in chap. 4, 5 and 6. These chapters describe the stability and drivability test procedures (e.g. test procedure in steady state conditions on circular track, lane double change and others). Application of these requirements to all fire engines is recommended.

2. Simplified factor analysis of the impact of the bodywork fitted to standard chassis on steering, stability and braking process of the vehicle

The structure of specialized bodywork is shaped at the stage of construction of this assembly. In addition to external dimensions, the arrangement of water and extinguishing tanks is planned, as well as the location of other elements of the emergency equipment. As a result, a bodywork is obtained with a specified position of the centre of masses and moments of inertia of the system connected with the body. With the appropriate (optimal) arrangement of the above-mentioned elements, basic stability and drivability characteristics mentioned in the previous chapter, should not change significantly. However, this requires careful observation and analysis of the scope and extent of such changes.

This chapter analyses the influence of the bodywork structure parameters on the stability of the vehicle's curvilinear motion and on selected braking indices.

2.1 Influence on the vehicle steering characteristics

After the specialized bodywork has been mounted, the centre of masses in the vehicle is shifted towards the rear axle. Fig. 1 presents an auxiliary drawing for determination of the centre of masses.

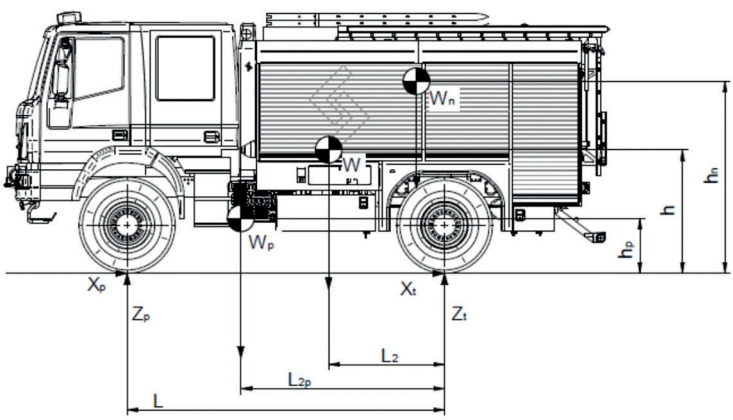

Fig 1. General drawing of the vehicle for the analysis of the influence of the parameters taken into consideration in chapter 2

Technical documentations of chassis manufacturers include chassis mass m_p, wheelbase L and the distance L_{2p} from the centre of masses to the rear axle. Therefore, the reaction of total loads on the roadway of Z_p front axle and Z_t rear axle can be calculated as follows:

$$Z_p + Z_t = W_p \quad (1)$$

$$Z_p = \frac{(W_p L_{2p})}{L} \text{ [N]} \quad (2)$$

$$Z_t = W_p[1 - \frac{L_{2p}}{L}] \text{ [N]} \quad (3)$$

where L_{2p} is the distance from the centre of chassis mass to the rear axle.

The L_2 distance of the centre of masses in the vehicle, after the specialized bodywork has been mounted, is different:

$$L_2 = \frac{Z_p + \Delta Z_p}{W} \text{ [N]} \quad (4)$$

where ΔZ_p is the incremented value of the total reaction of roadway to the front axle loads, after the specialized bodywork has been mounted, $W = W_p + W_n$, the mass of the ready vehicle.

Incremented values of vertical reactions of a roadway to total axle loads; ΔZ_p, ΔZ_t, caused by fitting the bodywork to the chassis, shall be as follows:

$$\Delta Z_p = \left(\frac{L_2}{L} - \frac{Z_p}{W}\right) W, \text{ [N]} \quad (5a)$$

$$\Delta Z_t = W\left[1 - \left(\frac{L_2}{L} - \frac{Z_p}{W}\right)\right] - W_p, \text{ [N]} \quad (5b)$$

One of the indices for the evaluation of the vehicle performance in a given curvilinear motion is the ratio of the deviation speed ($d\psi/dt$)) to the average turning angle of wheels δ_k, (the transfer function) $(d\psi/dt)/\delta$.

The said transfer function can be expressed by the formula, where the average turning angle of the wheels δ is defined by the turning angle of the steering wheel δ_H and the kinematic steering ratio i_s: (derivation; see, e.g.[3]),

$$\frac{\dot{\psi}}{\delta_H} i_s = \frac{1}{\frac{L}{v} + \frac{mv}{L}\left(\frac{C_{\alpha 2} L_2 - C_{\alpha 1} L_1}{C_{\alpha 1} C_{\alpha 2}}\right)} \quad (6)$$

where $m = m_p + m_n$ is the permissible total vehicle mass (chassis mass mp + body mass mn) determined by the chassis manufacturer, v is the speed and $C_{\alpha 1}$, $C_{\alpha 2}$, are the replacement coefficients of resistance to drifting of the front and rear axles, respectively. These coefficients depend on the mass load per a given axle and on replacement drift angles of α_1 front axle and α_2 rear axle.

The drift angles depend also on the inflation pressure of the tyres. Air pressure in tyres is one of the crucial factors affecting the resistance to drifting. In use, this pressure is adjustable within specific ranges (e.g. when the vehicle load changes), which at the same time affects tyre drifting [2]. Further information can be found in this book.

For the TMeasy tyre model [9] used in simulation tests very often, the influence of inflation pressure on vertical, longitudinal and lateral stiffness of tyres (that is on coefficients $C_{\alpha 1}$, $C_{\alpha 2}$) was assumed as a linear value.

L, m are defined in the interrelation (6). In accordance with the theory presented in [9], it can be assumed that the $C_{\alpha 1}$ and $C_{\alpha 2}$ coefficients shall not change significantly if inflation pressures of tyres are adjusted when the axle loads change as a result of the L_2 change. Corresponding diagrams showing the interrelation between tyre drift resistance coefficient and the inflation pressure can be found in specialist literature (e.g. [2]).

With the defined average wheel turning angle δ_k (that is, for the defined turning angle of the steering wheel δ_H, (because $\delta_k=\delta_H/i_s$) and driving speed v, when L_2 increases – that is when the centre of masses is shifted forward, the transfer function decreases, so the ψ deviation angle decreases at the same time. This affects understeering, which increases in this case. When L_2 decreases, understeering decreases at the same time. Trucks are characterised by low understeering, so shifting L_2 backwards is unfavourable, because it can cause oversteering of the vehicle.

Fig. 2 shows general diagram of relation between the transfer function $\{(d\psi/dt)/\delta_k\}$ and driving speed v.

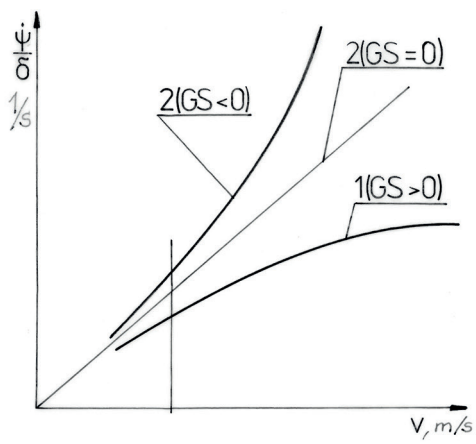

Fig. 2 Relation between the transfer function $\{(d\psi/dt)/\delta_k\}$ and the driving speed v. GS - understeer gradient [3].

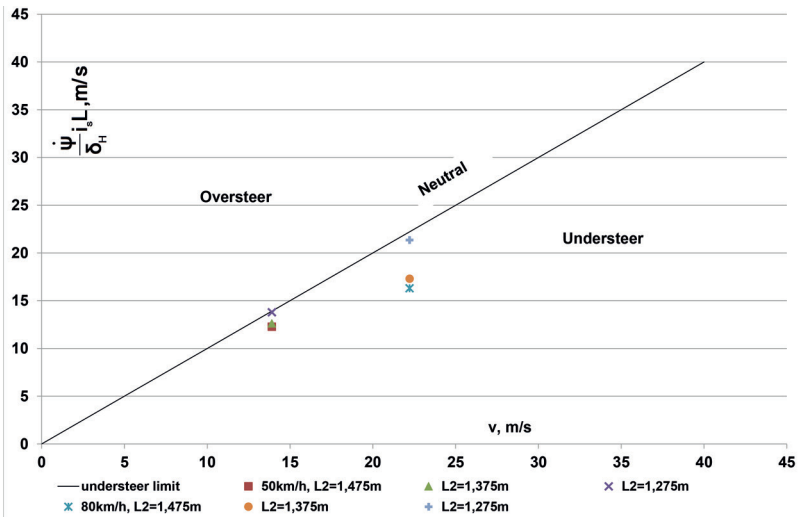

Fig. 3 The influence of shifting the L_2 distance between the centre of masses from the rear axle of the actual vehicle over its steerability, at the speed of 15 m/s (54 km/h) and 22.22 m/s (80 km/h)

In Fig. 2, the vertical line is drawn in the point corresponding to the specified speed indicated on the v-axis. If the transfer function $\{(d\psi/dt)/\delta_k\}$ increases at this speed due to reduction of L_2 (with other parameters in the formula (2) specified), the vehicle can shift to oversteering (the area of $GS<0$ in Fig. 3), which is considered a motion instability (on a bend, with a fixed steering wheel turning angle, the vehicle automatically narrows the turn, which results in moving the vehicle to the opposite traffic lane).

Example 1

A fire engine with total mass m=11320 kg, weight distribution on the front / rear axles: 4250/7070 kg, (L_1=2,45m , L_2 =1,48m), wheelbase L=3,93 m. Replacement coefficients of resistance to drifting of: the front axle $C_{\alpha 1}$ =330600 N/rad, the rear axle $C_{\alpha 2}$=710300 N/rad.

For a speed of 15m/s (54 km/h), the dependence $[(d\psi/dt)/\delta_H]$ is L for different distances between the centre of mass and the rear axle, L_2, decreased by 0.1 and 0.2 m was determined. The results are shown in Fig. 3.

Reduction of L_2 causes approaching to the state of oversteering. At the speed of 80 km/h, the car shifts to oversteering for L_2=1,25 m.

Road tests for this car showed a change in the characteristics, from slight understeering to oversteering, at lateral acceleration of ca. 3,5 m/s^2.

For a speed of 80 km/h, this can occur on a curve of the road with a radius of ca. 140 m.

Table 1. Figures to fig. 3

v, km/h (m/s)	L_2, m	$\frac{\dot{\psi}}{\delta_H} i_s L$ m/s	Remarks
50 (14)	1.475	12.28	The area limit is achieved for L_2=1,275m
	1.375	12.63	
	1.275	13.79	
80 (22.22)	1.475	16.3	The area limit is achieved for L_2=1,250m
	1.375	17.31	
	1.275	21.35	

2.2 Influence on lateral stability (roll over)

An important element of the factor analysis is determination of the value of lateral acceleration while driving on bends, at which the lateral stability is lost, beginning with one of the inner wheels loosing contact with the roadway when turning. Fig. 3 shows a fire engine in a transverse tilt to the right, in driving around a circular track. The angle of transverse tilt for this car has reached the value of 6°.

In the work [1], the relationship between lateral acceleration and structural parameters of the body and the vehicle is determined. A simplified model corresponding to the rear axle which, as known, can go into a skid as a result of relieving (and, in extreme cases, of detachment) of an inner wheel while driving on a bend, and make the vehicle roll over, was analysed therein.

The model adopted in the above-mentioned work is described by the following equation:

$$J_x(d^2\varphi/dt^2)+ C(d\varphi/dt) +(K-W_r h_3)\varphi =- F_y h_3 \tag{7}$$

The homogeneous equation is as follows:

$$\omega_n^2 = \frac{K\text{-}m_s\, g h_3}{J_x}, \frac{C}{J_x} = 2\zeta\omega_n, \bar{\varphi} = \frac{m_s h_3}{K - m_s g h_3} \tag{8}$$

where: J_x -is the moment of inertia of the body in relation to the axis of the tilt. $K\text{-}W_s h_3$ – is a substitute tilt stiffness of the suspension, C – is a coefficient of tilt damping in the suspension. F_y force appears suddenly after entering the bend causing tilting and further consequences - rolling over of the vehicle after the limit is crossed. For the above-mentioned work, it is assumed that the sprung mass is much greater than the unsprung mass.

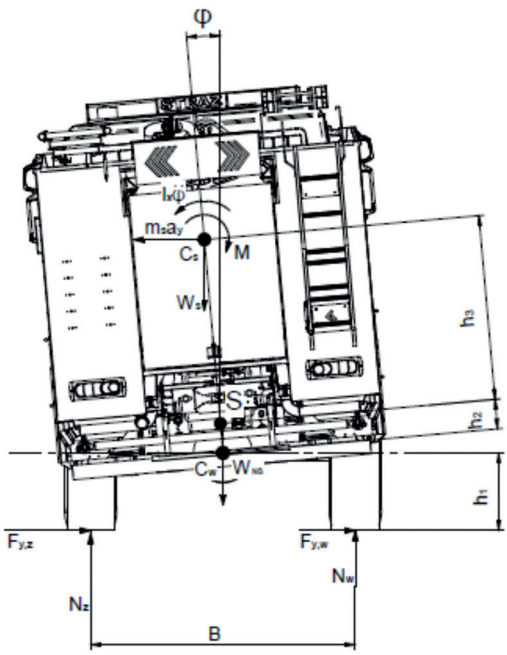

Fig. 4. View of the car during a fixed ride around a circular track, turn to the right. (on the basis of [1])

The relation $a_y=f(q_1, q_2,\ldots,q_n)$ presented in work [1] is the implicit function, in the following form :

$$\frac{a_y}{g} = \frac{B/2}{h_1+h_2+\eta(M_x,F_y,\alpha)+\{1+exp(-\pi\zeta)\}(h_3+b)} \tag{9}$$

where: B, h_1, h_2, h_3, are the values marked in fig. 4, $\eta=\{(dM_x/d\alpha)/dF_y/d\alpha)\}$ - the coefficient describing the interaction of a tyre with the roadway; representing the shift of the point of application of the roadway normal reaction to the outer wheel while turning α - wheel drift angle, M_x –tilting point, $F_y=F_{y,w}+F_{y,z}$ – the total of all lateral forces on wheels, b – shift of the centre of masses towards the external curvature of the track, ζ - dimensionless damping coefficient in the suspension,

The moment of inertia J_x is included in ζ determined by the formula:

$$\zeta = \frac{C}{2\sqrt{J_x(K-W_s h_3)}}, \tag{10}$$

As it follows from formula (10), with specified C, K, the ζ coefficient included in the (8) formula depends on J_x and the height of the h_3 sprung mass centre. These values are developed during the bodywork construction process.

In the (9) formula, B is constant. It can also be assumed that h_1 is constant, because changes in tyre deflection are slight. Moreover, the h_2 distance characterizing the distance from the tilt axis to the plane that runs through the front and rear axes is very small: $h_2 << h_3$ and for the [1] work h_2=0 was assumed.

Example 2

Because of the lack of own data, the set of data provided in [1] was used for a car with a permissible total weight ≈ 22700 kg.

Other data is given below (see Fig. 3 and formulas 6-9):

Wheel track	1.83 m
Height h_1	0.51 m
Height h_2	0 m
Height h_3	1.69 m
Sprung mass m_r	20400 kg
Unsprung mass m_r	2300 kg
Natural frequency, tilting vibration	1 Hz
Coefficient $\eta=\{(dM_x/d\alpha)/dF_y/d\alpha)\}$	0.075 m
Coefficient b	0.074 m

For the ζ =0.2 dimensionless damping coefficient, J_x=19669 kg m^2 and the K=1113895 Nm, and C=493410 rad kg m^{2}s^{-1} the transverse vibration equation coefficients in the equation were determined. For this set of data, a_y/g, according to equation (9), is: a_y/g = 0.28

If the h_3 height of the centre of masses increases by 0.05m, the J_x moment of inertia will increase by ΔJ_x=577 kgm^2 (i.e. by 3%). Then, the natural frequency of tilting vibration ω_n =6.2801 rad/s (that is, it increases slightly), and dimensionless damping coefficient ζ= 0.194 (it decreases minimally), which gives, as a result, a_y/g = 0.276. As it can be seen, the increase is minimal.

For a_y/g = 0.28 at the speed of 80 km/h, the loss of contact of the outer rear wheel when turning will take place on a 180 m radius curve, and at the speed of 50 km/h - on a 70 m radius curve. Fire engine must often turn curves with such radii on their way to emergency sites.

Passing by and overtaking should also be mentioned here, for which double lane change attempts are adequate. In the specialist standard [4], the required speed is not less than 40 km/h. For a_y/g =0.8 the radius of the curve can therefore be 45 m. If the total length of the vehicle is 10 m, then the radius on the lane change attempt section on the lane change attempt track (track dimensions - see the above-mentioned norm) is about 70 m, and therefore the speed at the verge of the wheel detachment from the ground cannot exceed 50 km/h.

2.3 Influence over braking forces

The influence of the position of the height of the centre of masses on braking will be analysed on the basis of the formulas taken from [6, 8].

Total normal wheel reactions: Z_p, Z_t depend on mass distribution on the axle and on the height of the centre of masses above the roadway. If the car brakes on a road slope with an angle with inclination α_d (unfavourable case), the normal reactions on the axles are determined by the following formulas:

$$Z_p = mg[\frac{L_2}{L} cos\, \alpha_d + \frac{h}{L}(\frac{a}{g} + sin\, \alpha_d)],[\mathrm{N}]$$
$$Z_t = mg[\frac{L_1}{L} cos\, \alpha_d - \frac{h}{L}(\frac{a}{g} + sin\, \alpha_d)],\ [\mathrm{N}] \tag{11}$$

The analysis of the braking process defines $\kappa = H_p/H_t$) – the braking force distribution coefficient, where H_p – total braking force on the wheels of the front axle, H_t – total braking force on the wheels of the rear axle. Designations in the formula (11): h - the height of the centre of masses above the roadway; $a_h/g = z$ - braking intensity.

The total, required braking force on the wheels at a given intensity is determined by the formula:

$$H = m\, g\, z,\ [\mathrm{N}] \tag{12}$$

Braking force of the front wheels should be:

$$H_p = \frac{\kappa}{(1+\kappa)H}\ [\mathrm{N}] \tag{13a}$$

Braking force of the rear wheels:

$$H_t = \frac{1}{(1+\kappa)H}\ [\mathrm{N}] \tag{13b}$$

Example 3

A fire truck (see: example 1) with total mass m=11320 kg, weight distribution on the front / rear axles: 4250/7070 kg, (L_1=2.45m, L_2=1.48m), wheelbase L=3.93 m. The height of the centre of masses above the roadway: h= 2.36m. It has been assumed that braking takes place on a horizontal road.

Changes of normal reactions and the required braking forces on individual axles, after changing the distance of L_2 and h, are presented in table 2. In the calculations according to formulas (8), the braking efficiency $z=(a_y/g)$=0.5 was assumed.

Table 2. Change of normal reactions and braking forces on individual axles after the mass distribution parameters have been changed

L_2, m	h, m	Z_p, kN	H_p, kN	Z_t, kN	H_t, kN	$\Delta H_p/H_{po}$	$\Delta H_t/H_{to}$
1.48*	2.36*	75.16*	37.56	35.89*	17.97	-	-
	2.41	75.87	37.95	35.18	17.57	0.01	-0.02
1.38	2.36	72.34	36.18	38.71	19.35	-0.04	0.08
	2.41	73.04	36.51	38.01	19.15	-0.03	0.07

*Basic values for the reaction: Z_{po}, Z_{to}, and L_2 as well as h

As it follows from the data provided in table 2, the centre of masses shifted backwards causes the greatest increment in the required braking force of the rear axle wheels. This increase can be compensated by the correction of the braking forces.

3. Summary

The analysis carried out in the above-mentioned work allows to see the range of changes of significant characteristics of the vehicle motion resulting from the construction of the fire truck bodywork. This is facilitated by the results of calculations carried out in chapter 2 for specific vehicles, according to the formulas derived in the publications of other Authors ([1], [4], [6], [8]).

The work can be helpful for construction departments of special vehicle manufacturers with van bodywork characterized by high position of the centre of masses.

Acknowledgments

The work compiled as part of the following Project: Construction of fire engines with preserved ergonomics of use. Research project co-financed by the National Centre for Research and Development based on the agreement No. DOB-BIO7/07/02/2015 dated 22/12/2015 for the execution and financing of the project for the national defense and security in tender No. 7/2015.

References

[1] Bernard J., Shannan J. Vanderploeg M. Vehicle Rollover on Smooth Surface, SAE TP No. 891991.

[2] Litwinow A. Kierowalność i stateczność samochodu. WKiŁ, Warszawa 1975.

[3] Mitschke M. Dynamik der Kraftfahrzeuge Band C: Fahrvehalten, Springer Verlag, Berlin Heidelberg, New York, Springer-Verlag Berlin Heidelberg , 1990.

[4] NFPA-414 Standard for Aicraft Rescue and Fire Fighting Vehicles, 2012 Edition.

[5] Nogowczyk P., Pałka A., Szczęśniak G. Opracowanie metodyki przeprowadzania analizy masowej niezbędnej do zrealizowania na początkowym etapie proektu konstrukyjnego w celu zapewnienia bezpieczeństwa ruchu i uniknięcia przeciążenia pojazdu – materiały konferencyjne (monografia) II Międzynarodowego Kongresu Bezpieczeństwa. W trosce o bezpieczne jutro. Reminiscencje i zamierzenia, pod red. nauk. A. Bolewskiego i J. Farysej - praca w druku.

[6] Świder P. Teoria ruchu samochodów, cz.1, Wyd. PK, Kraków 2012.

[7] PN-EN 1846-2 +A1 Fire fighting and rescue service vehicles. Part 2 – Common requirements. Safety and performance.

[8] Reński A. Budowa Samochodów. Układy hamulcowe i kierownicze. Oficyna Wydawnicza Politechniki Warszawskiej, Warszawa 1997.

[9] Walczak S. Wpływ właściwości dynamicznych modelu ogumienia na dynamikę poprzeczna samochodu. Czasopismo Techniczne. Mechanika. 3-M 2012/z8.