PROBLEMY MECHATRONIKI
UZBROJENIE, LOTNICTWO, INŻYNIERIA BEZPIECZEŃSTWA

ISSN 2081-5891 **12, 1 (43), 2021, 87-100**

PROBLEMS OF MECHATRONICS
ARMAMENT, AVIATION, SAFETY ENGINEERING

Concept for the Construction and Application of a Counter-UAV Defence System

Damian WOJTYRA[1], Kamil WACŁAWIK[1*], Ksawery KRENC[1],
Marcin DŁUGOŃ[2]

[1] *Military University of Technology,*
Faculty of Mechatronics, Armament and Aerospace
2 Sylwestra Kaliskiego Str., 00-908 Warsaw, Poland
[2] *Zakłady Mechaniczne"TARNÓW" S.A.*
30 Jana Kochanowskiego Str., 33-100 Tarnów, Poland
[*] *Corresponding author's e-mail address and ORCID*:
kamil.waclawik@wat.edu.pl; https://orcid.org/0000-0002-0919-2390

Received by the editorial staff on 13 August 2020
The reviewed and verified version was received on 15 February 2021

DOI 10.5604/01.3001.0014.7853

Abstract. This paper describes a concept for the construction and application of the Counter-UAV Defence System as developed by the Polish consortium of Zakłady Mechaniczne "Tarnów" S.A. (ZMT) and Military University of Technology (MUT). The article describes a system designed to counteract unmanned aerial vehicles, which consists of a multi-barrel machine gun and a radiolocation system. The Counter-UAV Defence System enables the combating of aerial targets, including unmanned aerial vehicles (UAVs).

Keywords: anti-aircraft systems, anti-UAV warfare, automatic tracking

1. INTRODUCTION

The armed conflicts since World War Two indicate that air superiority as being one of the critical preconditions for success in combat. All types of armed forces, with air defence and air force foremost, should evolve in parallel with innovation. The primary mission of air defence (a.k.a. anti-aircraft warfare or counter-air defence) is the protection of high-value targets against aerial threats. The development of new air attack assets, especially UAVs (unmanned aerial vehicles), has seen significant improvement in recent years and air defence must remain prepared through utilisation of innovations and new technologies. Aerial vehicles can operate over a very wide range of velocities, which forces a need for flexibility in anti-aircraft warfare assets. Air defence systems should be capable of day and night operation in different weather conditions. Air defence systems may feature optoelectronic devices with TV and IR cameras, other systems (GPS, IFF), and radar equipment for the detection of hostile aerial targets.

Given their low production costs, UAVs require cost efficiency in combating them. The use of projectile ammunition or rocket missiles for anti-UAV warfare drastically increases costs. The small size and dynamic movement of UAVs greatly reduce the risk of their detection and countering. Another aspect which improves the operational effectiveness of UAVs is their capability for autonomous flight along a pre-programmed path, with contingencies for emergency conditions. UAVs operate by wireless data transmission or, if in autonomous flight, satellite navigation. Considering these aspects it would be best to counter UAVs with non-kinetic warfare assets. Jamming of the uplink between the operator and its UAV or the satellite navigation downlink can effectively prevent completion of the UAV’s mission. Non-kinetic warfare generates much lower costs in terms of defence against UAVs.

Considering this issue and the demand for anti-UAV warfare systems, Zakłady Mechaniczne “Tarnów” S.A. (Tarnów, Poland) and Military University of Technology (Warsaw, Poland) are carrying out a research and development project to deliver a counter-UAV defence system. The project considers the kinetic and non-kinetic effects on aerial threats, especially in the form of UAVs.

2. UNMANNED AERIAL VEHICLES (UAVs)

UAVs are becoming increasingly commonplace and available, and in multiple commercial and military versions. This includes very small and inexpensive UAVs with a flight time of up to 15 minutes to extremely large versions with much longer flight times and operating ranges. Military UAVs are first distinguished by their better performance and combat-assisting solutions. They are usually able to large payloads and may feature properties which reduce detection.

The range of UAV applications is very extensive. Civilian and military services use UAVs for patrolling state borders and high-value military or civilian assets. However, operation of UAVs may disturb the normal operations of military and commercial airports; hence systems for detection and warfare of and against UAVs are becoming commonplace.

3. APPLICATION OF THE COUNTER-UAV DEFENCE SYSTEM

The Counter-UAV Defence System project is first addressed to air defence services to complement the extremely-small range defence layer. The Counter-UAV Defence System (abbreviated to “CUDS”) is designed for warfare against very small targets which are difficult to detect and combat (Fig.1).

Fig. 1. Overview of CUDS

While they can be small, UAV systems are far from harmless. Considering the potential threats at a commercial or military airport, UAVs are considerable assets in their capability to disrupt normal airport operations. During the analysis of demand for CUDS, it was decided to make CUDS mobile as it could be potentially used for the temporary protection of high-value targets, including events, and to enable fast relocation to match that of the threat. The application of non-kinetic anti-UAV warfare assets could potentially enable the use of CUDS by services intended to secure and protect civilian assets (border guards, police). CUDS can be remotely controlled from an operator’s console and be deployed on any vehicle where the chassis has a fire unit installed.0

Military applications of CUDS are primarily based on cooperation with higher-tier functions, including radar stations. CUDS can be operated by a local radar station or by processing command and control data from a command station. This concept of cooperation enables any combination of CUDS with other air defence systems. CUDS can operate without any radar system. A drawback of radar detection and tracking is the active emission of energy, with the engineering concept including an operating mode applying only the CUDS fire unit with the operating station. In this operating mode, CUDS enables its human operator to manually observe, automatically track, and respond with fire to aerial targets. With no radar station deployed with CUDS, it remains 'stealth' to other reconnaissance systems of the enemy. Non-radar CUDS applications are feasible for deployment at airports given that it prevents the introduction of interference (jamming) which could interrupt normal airport operations.2

4. SYSTEM DESIGN

The designed system is based on many electronic systems tasked with the control of specific system component devices. The core component of CUDS is a fire unit, which executes the basic mission functionalities. Other CUDS components include a power supply, a radar station, and an operating station for CUDS management.

4.1. Fire unit

The core structural component of the CUDS fire unit (Fig.2) is a stationary unit for secure attachment of CUDS at its fire station base or one designed to be carried on a vehicle. The stationary unit accommodates the power supply components required for the fire unit, including a hardware hub for data connectivity.

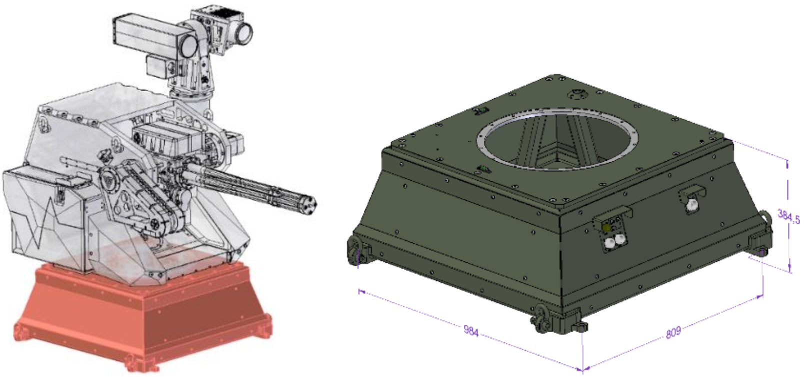

Fig. 2. Fire unit with the base shown (source: ZM Tarnów)

The design of the base was engineered and optimised for minimum possible size and weight, and to accommodate a cable reel, the power supply components, and other hardware. The structure is provided with anchors for the attachment of CUDS to a carrier vehicle or at the location of deployment. The structure features ports for connection of the power supply and other essential data communication elements of CUDS.

Another essential component of CUDS is the optoelectronic head (Fig.3) for identification, observation, and tracking of aerial targets. The optoelectronic sensor cluster was developed with a centre of gravity at a location which imposes a minimum load on the electric motors articulating the cluster. A feature is provided to enable offset of the optoelectronic sensors during final balancing of the optoelectronic head.

The cluster's structure permits -15° to +15° azimuth and -5° to +85° elevation. The movement of the optoelectronic head is designed to compensate for ballistic corrections and lead angles. The motion system of the optoelectronic head features dedicated motors which directly couple the rotor to the system's axes, with contactless off-axis encoders to enable control.

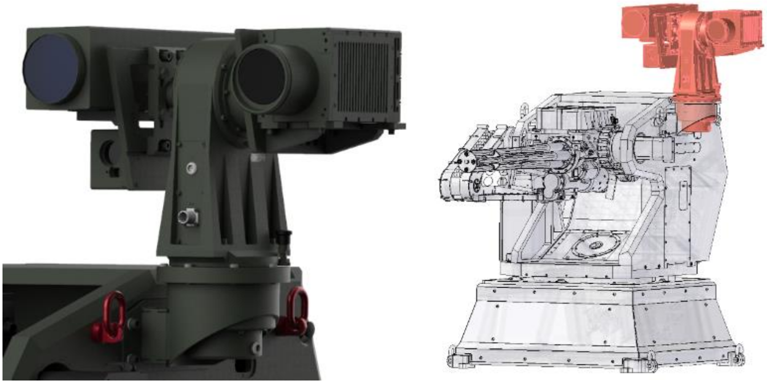

Fig. 3. Fire unit with the optoelectronic head shown (source: ZM Tarnów)

The optoelectronic head features a TV camera, an IR camera, and a laser rangefinder. These sensors allow the observation and combating of targets, day or night, with the capability for automatic tracking and operation of the ballistic computer. There is no capability of tracking targets with the optoelectronic head only, while the fire unit permits motion in a limited azimuth range 0.

The key component of the fire unit is its top cradle (Fig.4), which secures all the fire unit components. The cradle is connected to the base through a dedicated bearing assembly. The centre of gravity of the rotating component is aligned with the bearing assembly's axis.

The cradle permits firing within an elevation range of -20° to 70°, which required the development of a structure that could accommodate a machine gun, including clearance for the ejection of chain links and empty cases. The cradle moves by way of a servomotor complete with a transmission gear.

The top cradle includes the mount for a Gatling gun, and was designed to translate the load and shocks during firing. The gun mount permits underslung installation of the Gatling gun to bring the centre of gravity as close to the axis of rotation as possible.

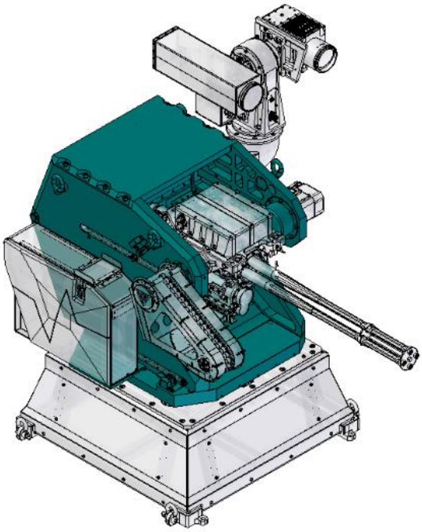

Fig. 4. Fire unit top cradle (source: ZM Tarnów)

The top cradle carries the ammunition box, with a capacity of approximately 400 rounds. The ammunition box is mounted to the side of the top cradle via a rubber vibration damper, to reduce the vibration during firing.

Another component of the fire unit is the drive control system, a very complex unit which comprises drive controls, the fire unit on-board computer, and the video output processing hardware. Considering the maximum operating temperature of the installed systems, the drive guidance system is provided with passive cooling. The heart of the planned drive control system is a PC/104 on-board computer, which has fire control system implemented. The fire control software is primarily tasked with management of the entire system, processing the video feeds from the optoelectronic head, display of the operator's GUI, and execution of the ballistic computer functions to operate the fire unit.

The video feeds are captured by video controllers, which enable digital analysis and processing of high-definition image. The device supports the PC/104 bus standard, which enables easy data communication with the on-board computer.

The videotracker installed in the fire unit uses the video feed signal processed by the video feed capture devices to enable recognition of targets and to determine their position relative to the fire unit, providing the data essential for automatic tracking of targets.

The next essential component of the fire unit is the power supply system, with a design dedicated for the whole CUDS. The power supply system includes supercapacitors and dedicated transistors which provide the required power for the motion systems. The power supply system is fail safe to prevent failure of the connected terminal devices by real-time monitoring of the system's operating parameters.

4.2. Gatling system machine gun

The core component of CUDS is a WLKM, a multiple-barrel machine gun (Fig.5). It is a *Gatling* system, electrically driven and fed with 12.7 × 99 mm NATO ammunition in a disintegrating M9 linked belt. The machine gun system comprises an assembly of four rotary barrels, with a design firing rate of 3,600 rounds/min. The choice of WLKM was a result of the design requirements for CUDS and this Gatling-type machine gun has been proven effective against ground and aerial targets.

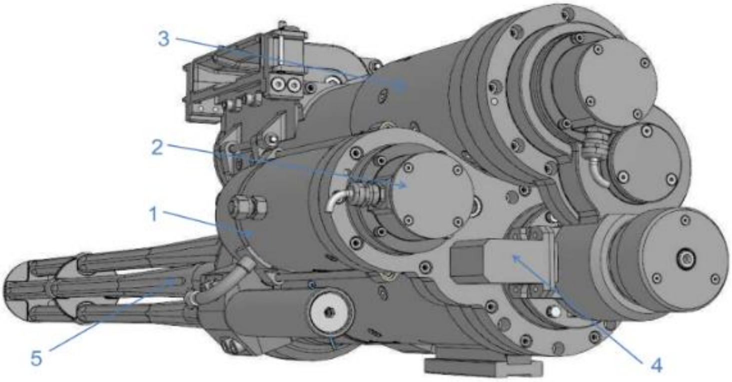

Fig. 5. WLKM multi-barrel rotary machine gun (source: ZM Tarnów)

The maximum single burst is 200 shots, with the projectiles achieving an approximate muzzle velocity of 850 m/s. The effective range of WLKM is approximately 1,800 m. The design of the machine gun enables engaging and destroying ground targets up to 2000 m away and aerial targets up to 1,500 m away.

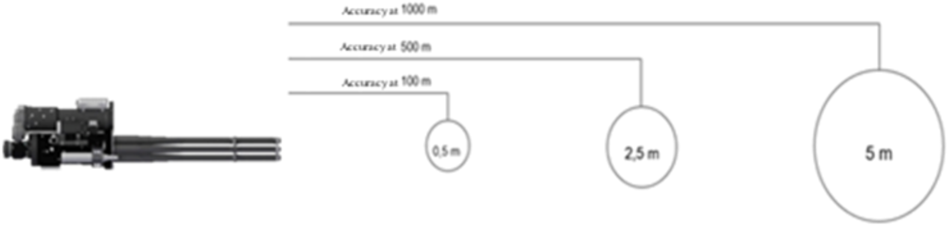

Fig. 6. WLKM scatter at target distance (source: ZM Tarnów)

Moreover, the WLKM features projectile scatter, which is a great advantage to CUDS given the specific requirements for effective anti-UAV combat. The higher the projectile scatter, the larger the area of impact coverage, which significantly increases the chances of destroying an UAV, a relatively small target0.

4.3. Operating station

The CUDS operating station (Fig. 7) includes an operator's GUI display along with a complement of dedicated control buttons. To facilitate control over the fire unit, the operating station features a joystick for elevation and azimuth control of the weapon. Given the considerable number of CUDS configuration options, the operating station is also provided with a dedicated operator's console. In a situation of anti-UAV warfare engagement, the CUDS operator has a limited time to make the decision to engage or not engage the target and react accordingly; hence, all control actuation components follow an ergonomic layout.

Fig. 7. Operating station (source: ZM Tarnów)

The CUDS operating station provides control over the fire unit via the fire control system. The fire control software is implemented within the fire unit's on-board computer. The GUI shown on the operating station display is used in communications with the fire control system, using cables to relay the required information to the CUDS operator. The GUI software receives the video feed from the optoelectronic head and presents the data on the operator's display. The control buttons on the operator's console can control specific CUDS operating states (e.g. switching between specific camera feeds).

Aside from imaging the video feeds from the optoelectronic head, the GUI software can read essential information about the orientation and status of the fire unit. In its target state, the system enables presentation of data from the interfaced radar system to achieve air situation awareness within the area of responsibility.

5. RADAR SYSTEM

CUDS should provide information about the air situation within its area of responsibility. Given the nature of UAVs as the targets to be combated, a radar system (Fig.8) will be implemented in the CUDS configuration discussed in this paper. Given the low overall size of CUDS, the radar system should also be compact and meet all the requirements for target detection. The CUDS project includes provision for interfacing with a radar system designed for very short range air defence systems. The radar is optimised for detection, classification, and tracking of all types of aerial targets at altitudes from 10 to 10,000 m and a maximum distance of 30 km. The blind zone radius of the radar system is approximately 150 m, with the azimuth accuracy down to 0.5°, to enable efficient detection of small targets within the range of the radar system. The specific distance accuracy of the radar system is 50 m and the target velocity accuracy is 1 m/s.

Fig. 8. Radar system

The radar system enables detection of UAVs and larger aerial targets (such as fixed wing and rotor aircraft). The field of view of the radar system is 90° azimuth and 80° elevation, and this configuration enables omnidirectional detection (with 4 radar units deployed) or detection within the specific area of responsibility. The radar is capable of scanning and real-time operation. If interfaced with CUDS, the radar system forms a consistent, closed system for detecting, observing, and combating UAVs.

6. NON-KINETIC WARFARE SYSTEMS

The preliminary stage of the CUDS project development enabled an analysis of solutions related to non-kinetic anti-aerial warfare. The design and electronic systems of UAVs make non-kinetic warfare viable against them. The analysis demonstrated that military UAVs, considering the protection and security levels of their on-board electronic systems, pose a considerably more significant challenge than commercial UAVs.

Commercial UAV electronic systems operate on known RF frequency bands and are less hardened against electronic jamming. The primary component which enables non-kinetic anti-UAV warfare is the jamming of the data transmission between the UAV and its operator. Civilian UAVs are much easier to counter with non-kinetic warfare, since they use standard Wi-Fi data transmission. There are many commercially available solutions for jamming UAV Wi-Fi transmission links.

Professional commercial solutions exist which support protection and security against Wi-Fi jamming. UAVs can be capable of autonomous flight along a pre-programmed path. UAVs can also use commercially known navigation systems to support autonomous flight. Based on GPS location, and with the capability, an UAV can chart a pre-programmed autonomous flight path to complete the mission. Given the sheer popularity of GPS-based navigation systems, solutions exist for jamming GPS data while more professional solutions can spoof the true GPS signal to simulate false position or time for the targeted UAV.

Other forms of non-kinetic warfare exist. Wi-Fi / RF transmission jamming solutions aside, systems exist which enable hijacking the control over UAVs. It is possible to develop systems for interception of civilian UAVs. With access to the right solutions, a module can be developed to enable data communication with targeted UAVs. Considering the technical specifications of UAVs from most known manufacturers and deciphering the implemented UAV data communication protocols, control over the UAVs can be hijacked.

Non-kinetic warfare against commercial UAVs is much less challenging than against military UAVs. One of the main objectives in the design of military UAVs is the security and protection of the on-board electronic systems and wireless data transmission.

The application of security and protection components significantly complicates the required functionalities of anti-UAV warfare systems.

Wireless data transmission by which military UAVs operate is protected in several ways. The basic data transmission security measure is data encryption to prevent eavesdropping on the UAV data communication link. UAV wireless data transmission devices have dedicated algorithms implemented to enable wireless band jumps or wireless band change depending on the actual RF band saturation, with either solution facilitating the avoidance of jamming by external sources. It is possible to jam military-grade wireless data transmission of UAVs, but this requires transmitters of considerable output power. Wireless data transmission of a military UAV can be jammed if very high RF power is output in a specific RF band 0.

Not unlike in commercial UAV applications, military UAVs can be capable of autonomous flight and mission control. Military UAVs differ in this regard because their GPS navigation modules are capable of encrypting the GPS data link. SAASM modules (Selective Availability Anti-spoofing Module) enables protection of wireless data transmission without any risk of the UAV receiving false (spoofed) GPS data. However, it is still possible to jam the GPS signal to disrupt correct positioning data reading by the targeted UAV, leading to GPS data transmission loss.

Having analysed the non-kinetic anti-UAV warfare solutions, the next development stages of CUDS could feature investigation of the existing non-kinetic warfare systems and consideration for their application in CUDS.

7. PROJECT IMPLEMENTATION

Following its conceptual work, a considerable part of CUDS was developed to enable preliminary testing of specific fire unit components. During the fire unit design engineering by ZM Tarnów, the fire unit was tested with live ammunition. The tests were to determine whether the designed and constructed control systems, power supply systems, and the mechanical assemblies of the machine gun unit performed correctly. The primary components which were tested included the WLKM Gatling gun, including the control and ammunition feed systems, the chambering system, and the case ejector deflector (Fig. 9).

The tests of the control and ammunition feed systems verified that the concepts were valid, and the system passed the live ammunition tests. During the tests, the case ejector deflector orientation was determined to allow the spent cases to be removed optimally and without interfering with the performance of the fire unit system.

Fig. 9. Test stand (source: ZM Tarnów)

This stage was completed by testing the control computer with the conceptualized software. When fully online, the control computer allowed testing the basic functionalities of the GUI software. The GUI software comprises two standalone components, the fire unit camera feed processing and visualisation system, and the fire unit status display and motion control section (Fig. 10).

Fig. 10. Graphical User Interface

The tests verified that the software performed correctly. The camera feed was relayed in real time and displayed by the software. The developed control systems allowed actuation of the fire unit's motion drive systems.

The next stage in software development is to engineer other system functionalities to achieve full compliance with all CUDS requirements defined in the preliminary stage of the project.

8. CONCLUSIONS

The completed stages of the CUDS research project allowed the development of the CUDS design engineering documentation. The analysis and design engineering of CUDS components allow the conclusion that CUDS now features the minimum required functionalities. The CUDS construction will permit elevation and azimuth guidance of the fire unit by operation of the drive systems together with the developed control system.

The next stage of the CUDS project will be the production of a complete fire unit and operating station, and acquisition of a radar station to complement CUDS with aerial target detection capability. Once purchased, the radar station will become a part of the existing CUDS, and adapted for hardware and software integration.

During acquisition of the radar system, other structural components of CUDS will be developed along with the CUDS software solution to achieve full functionality of CUDS.

FUNDING

This paper is a deliverable from the research and development project ref. DOB-2P/03/03/2018 “System zwalczania BSL” (Counter-UAV Defence System) financed by the Polish National centre for Development and Research.

REFERENCES

[1] Idziaszek Zdzisław, Paweł Typer. 2016. „Aspekty badawcze i wdrożeniowe oraz analiza możliwości zastosowania 12,7 mm WLKM”. *Problemy Techniki Uzbrojenia* 132 (2) : 7-23.

[2] Kaczmarek Wojciech, Konrad Sienicki. 2010. „Mechatroniczne aspekty projektowania rozproszonych systemów obrony przeciwlotniczej”. *Mechanik* 7 : 508.

[3] Kaczmarek Wojciech, Jarosław Panasiuk, Waldemar Śmietański, Zbigniew Peczyński, Łukasz Zbrzeżny. 2014. „Wybrane aspekty badań laboratoryjnych optoelektronicznych głowic śledząco-celowniczych”. *Mechanik* 7: 273-283.

[4] Sienicki Konrad, Krzysztof Motyl, Tomasz Zawada. 2011. „Metody oceny skuteczności przeciwlotniczego systemu artyleryjskiego*”. Problemy Techniki Uzbrojenia* 7 : 609.

[5] Matyszkiel Robert, Paweł Kaniewski, Bogusław Grochowina, Mateusz Kustra, Rafał Polak. 2019. „Wpływ wybranych mechanizmów dynamicznego zarządzania widmem częstotliwości na zwiększenie bezpieczeństwa realizacji szerokopasmowych usług sieciowych”. *Elektronika: konstrukcje, technologie, zastosowania* 60 (2) : 21-24.

Koncepcja budowy i wykorzystania systemu zwalczania BSL

Damian WOJTYRA[1], Kamil WACŁAWIK[1], Ksawery KRENC[1], Marcin DŁUGOŃ[2]

[1]*Wojskowa Akademia Techniczna,*
Wydział Mechatroniki, Uzbrojenia i Lotnictwa
ul. gen. Sylwestra Kaliskiego 2, 00-908 Warszawa
[2]*Zakłady Mechaniczne”TARNÓW” S.A.*
ul. Jana Kochanowskiego 30., 33-100 Tarnów

Streszczenie. W artykule opisano koncepcję budowy i wykorzystania systemu zwalczania BSL realizowanego przez konsorcjum ZM Tarnów i WAT. Artykuł opisuje system przeznaczony do przeciwdziałania bezzałogowym statkom latającym, który złożony jest z wielolufowego karabinu maszynowego i systemu radiolokacji. System umożliwia automatyczne zwalczanie obiektów powietrznych, w tym Bezzałogowych Statków Powietrznych.

Słowa kluczowe: systemy przeciwlotnicze, zwalczanie BSL, automatyczne śledzenie